DERBY H

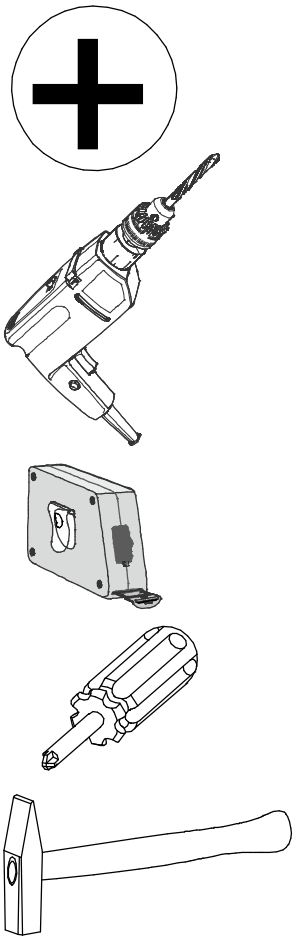

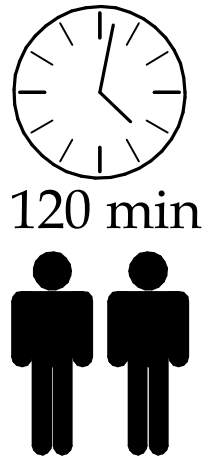

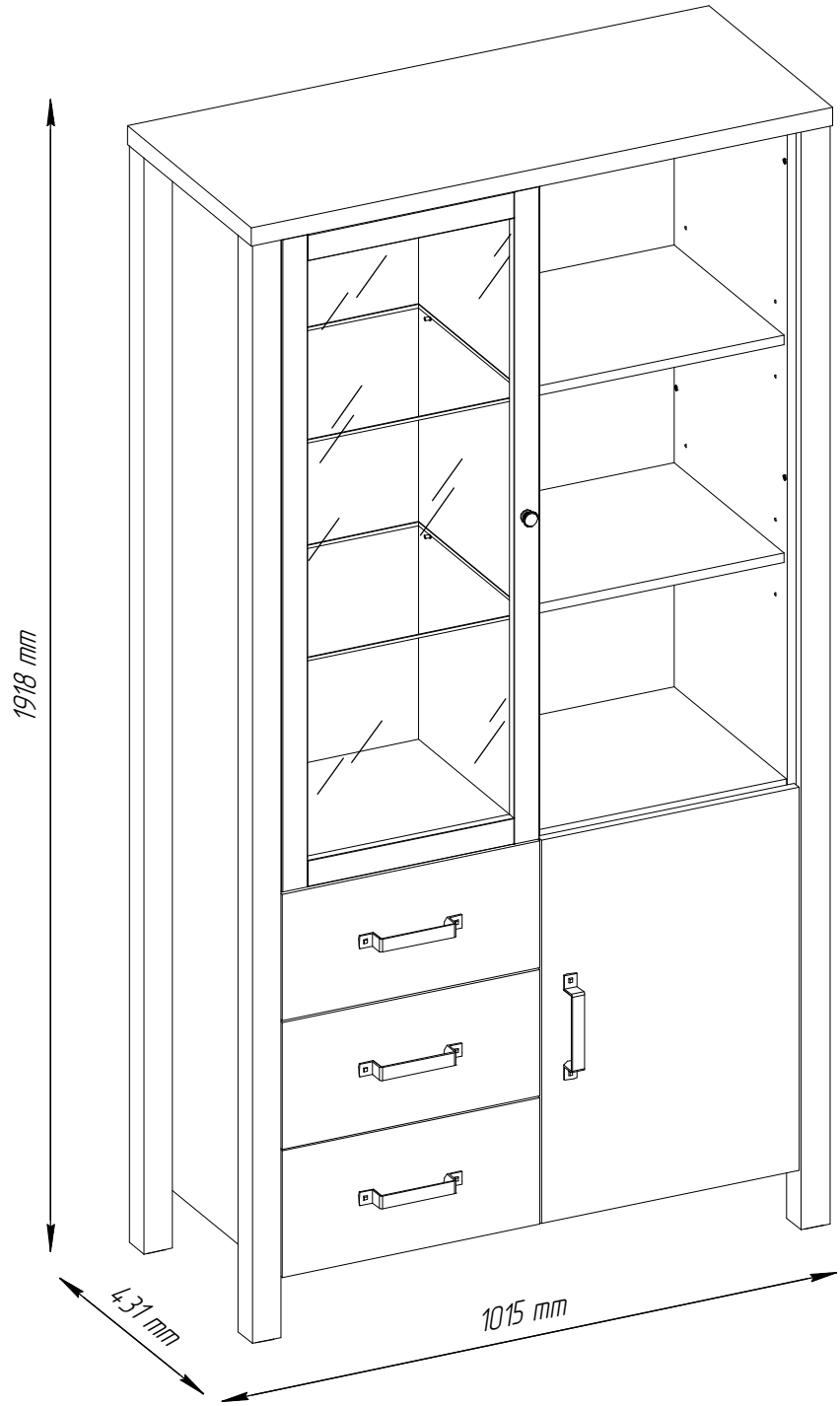

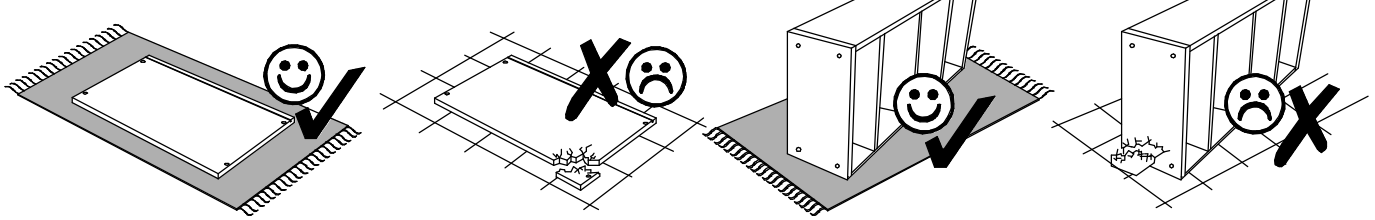

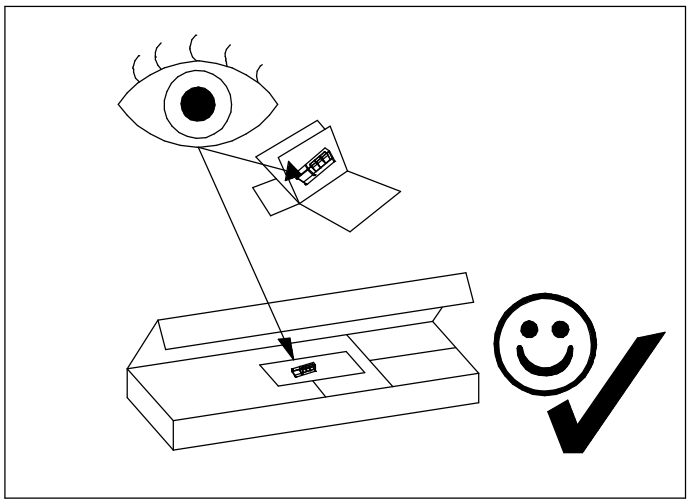

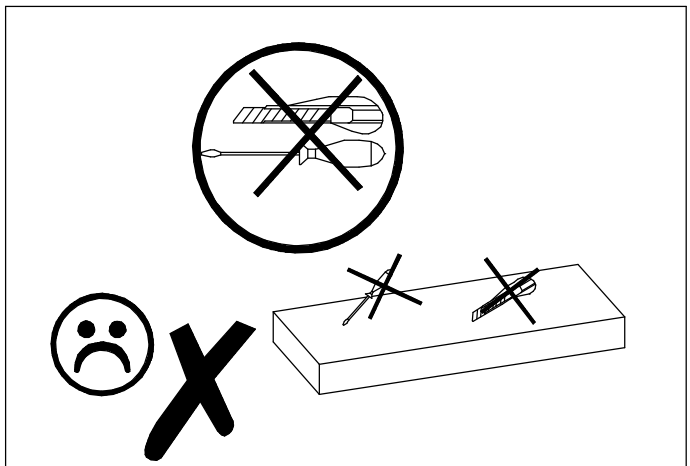

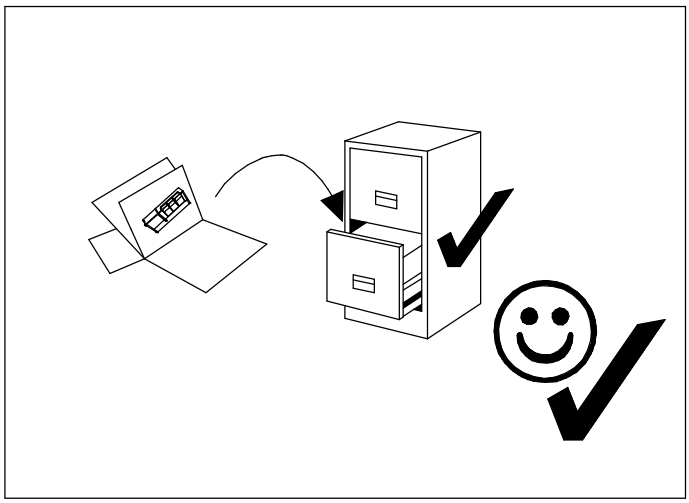

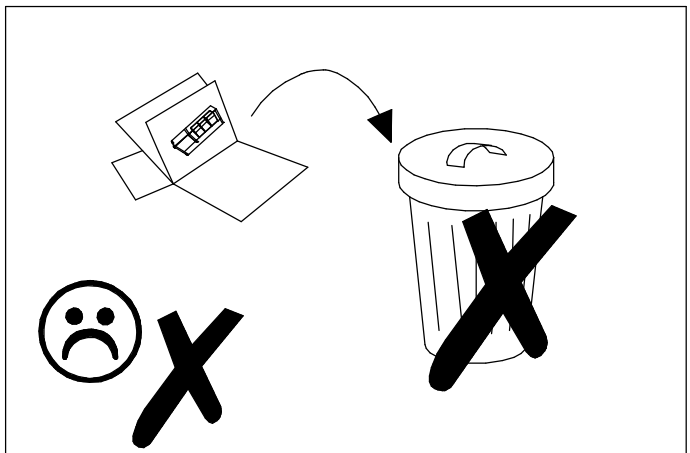

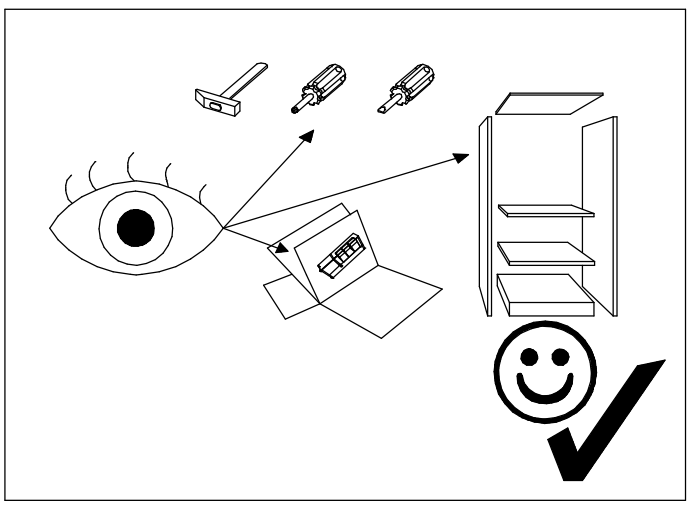

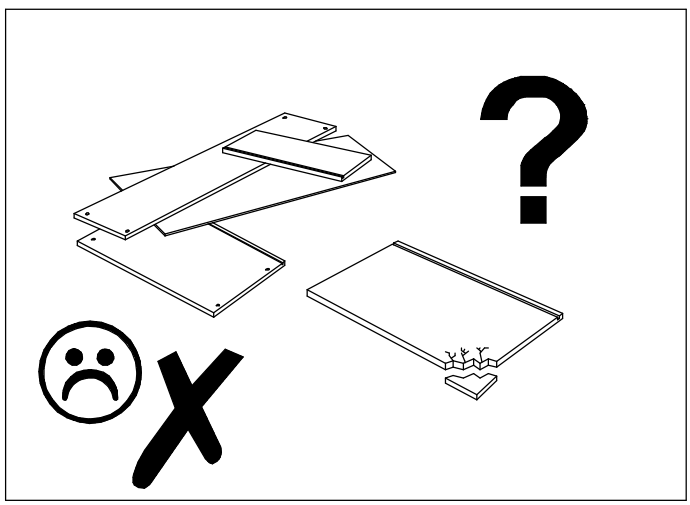

A1 x28 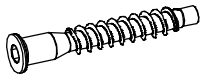 6.4x50	A3 x1 4mm	B x38 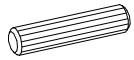 8x30	B2 x2 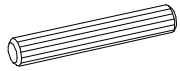 8x50	C x2 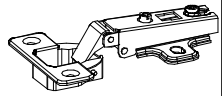 D=35	C8 x3 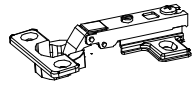 D=26
E x64 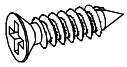 3.5x16	E5 x8 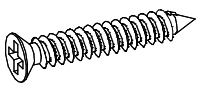 4x35	E8 x1 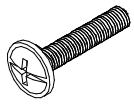 M4x25	KN x3 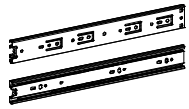 L-350mm	L1 x12 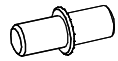	L2 x8 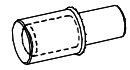
L8 x9	P x26 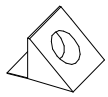	P1 x10 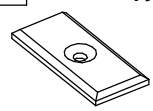	M x4	M2 x1	N2 x1 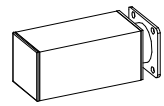 AL100 40x40
N4 x4 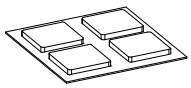 D=35x35	R1 x32	R2 x28	R3 x32	R4 x2 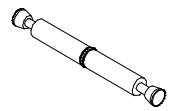 d7x76mm	S1 x10 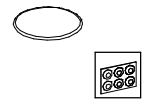
T x20 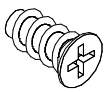 6.3x13	W3 x1 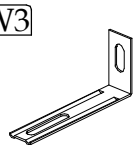	Z3 x28			

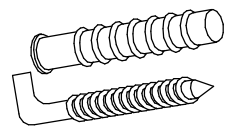

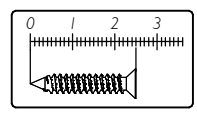

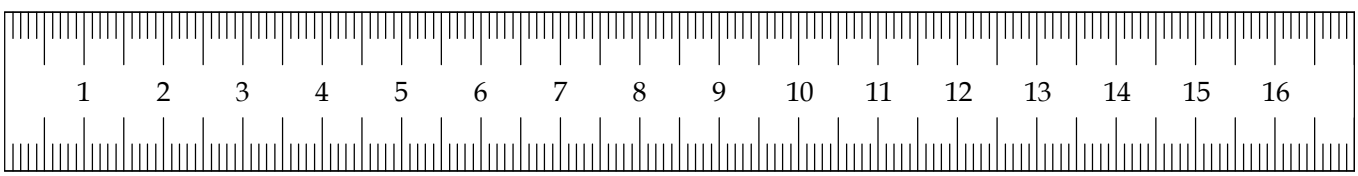

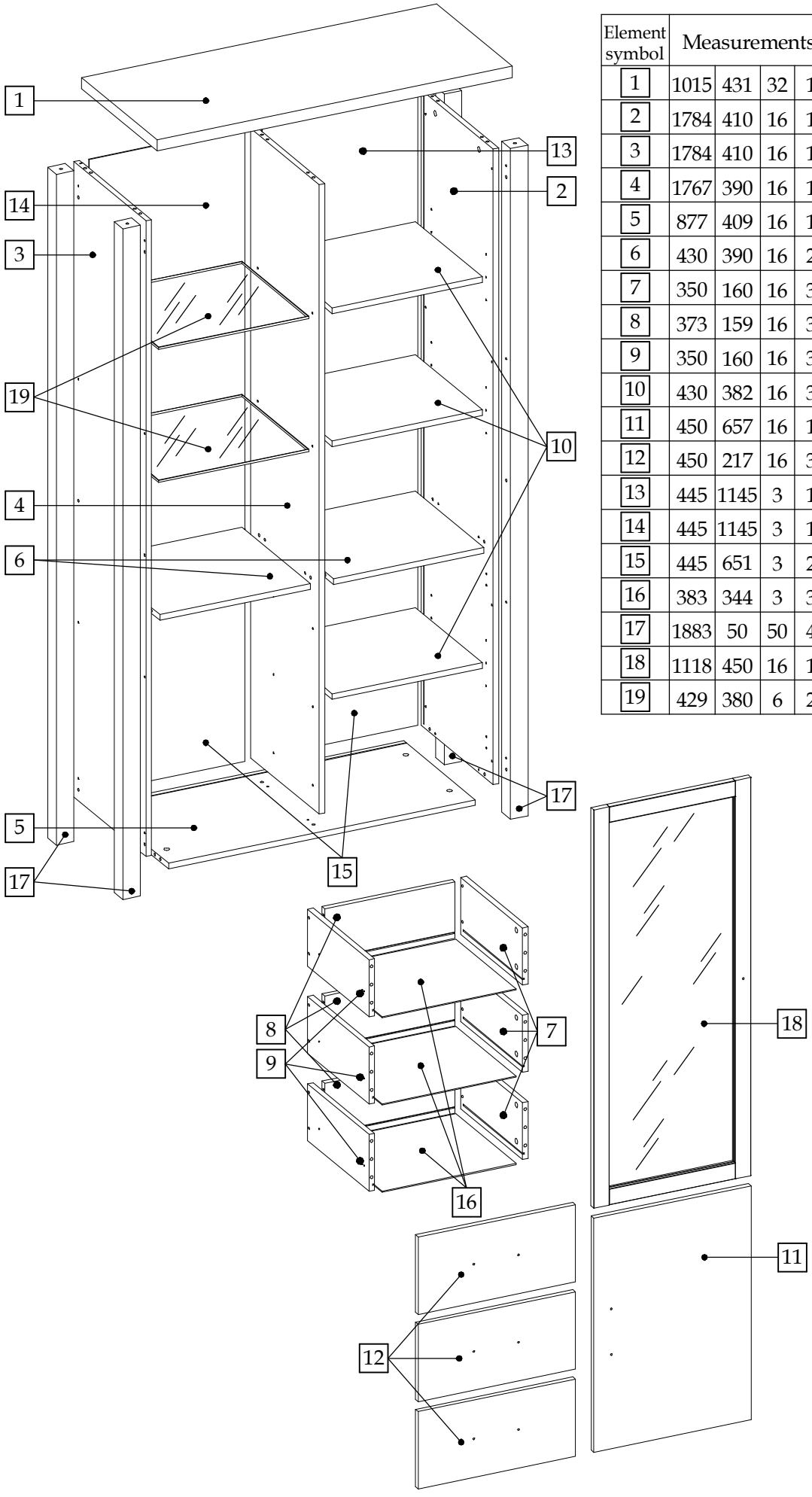

Element symbol	Measurements				Code	Pack
1	1015	431	32	1	1002	2/5
2	1784	410	16	1	1005	1/5
3	1784	410	16	1	1006	1/5
4	1767	390	16	1	1053	1/5
5	877	409	16	1	1007	1/5
6	430	390	16	2	1010-1016	2/5
7	350	160	16	3	1037-1042-1047	1/5
8	373	159	16	3	1038-1043-1048	1/5
9	350	160	16	3	1039-1044-1049	1/5
10	430	382	16	3	N/A	1/5
11	450	657	16	1	1052	2/5
12	450	217	16	3	1036-1041-1046	2/5
13	445	1145	3	1	1090_v	1/5
14	445	1145	3	1	1091_v	1/5
15	445	651	3	2	N/A	1/5
16	383	344	3	3	N/A	2/5
17	1883	50	50	4	1883x50_u	3/5
18	1118	450	16	1	Glass door	4/5
19	429	380	6	2	Glass shelf	5/5

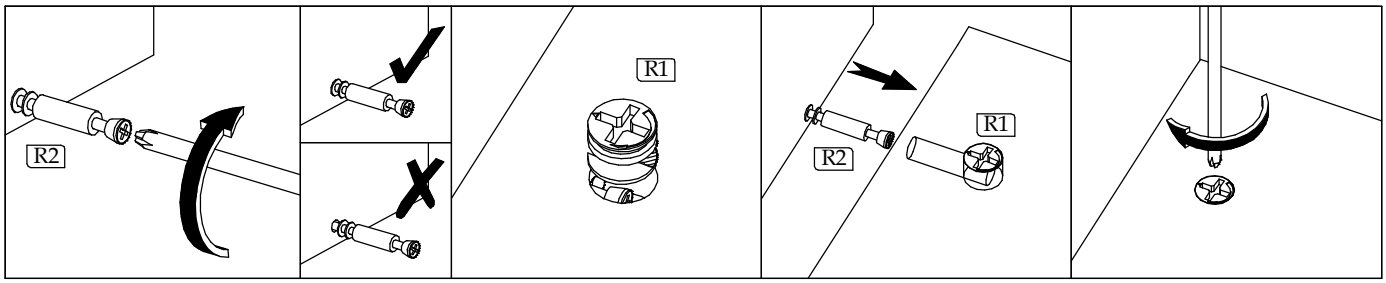
R2
R1
R1
R2

1

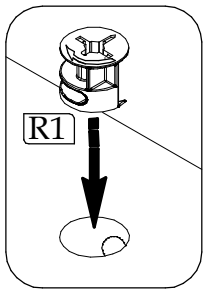
R1

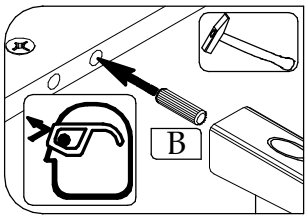
B
≈8mm

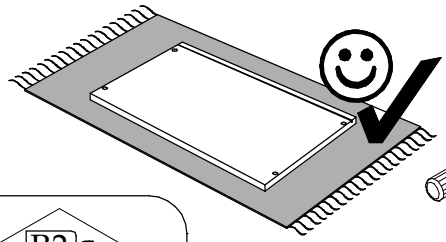

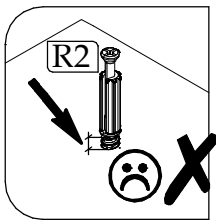
R2

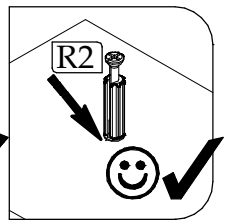
R2

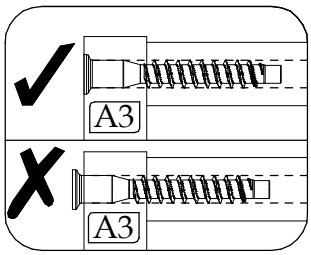
A3
A3

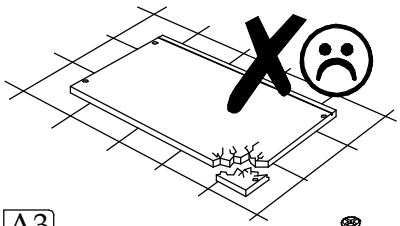

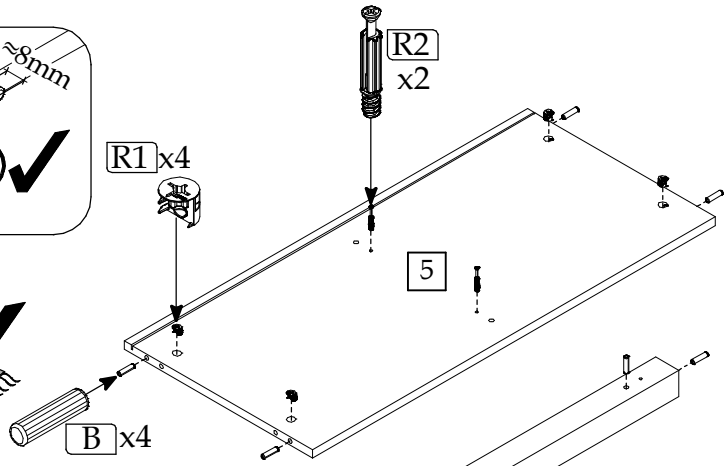
R2
x2
R1 x4
5
B x4

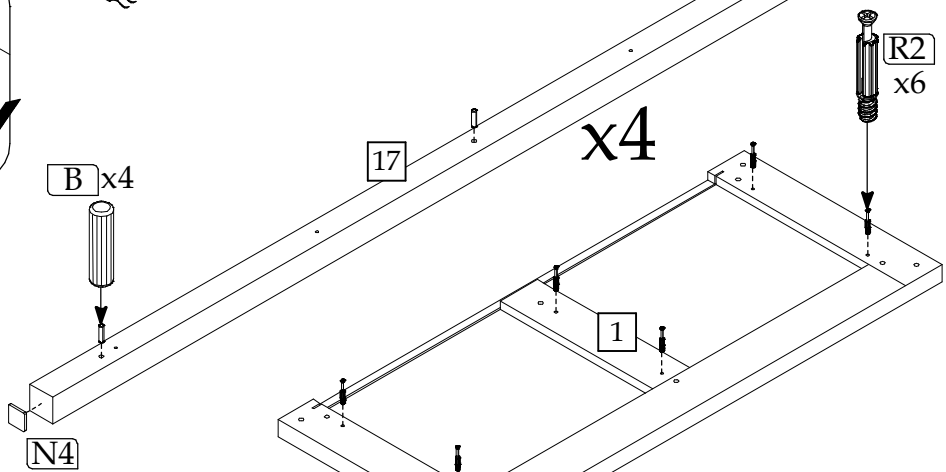
R2
x6
x4
B x4
17
1
N4

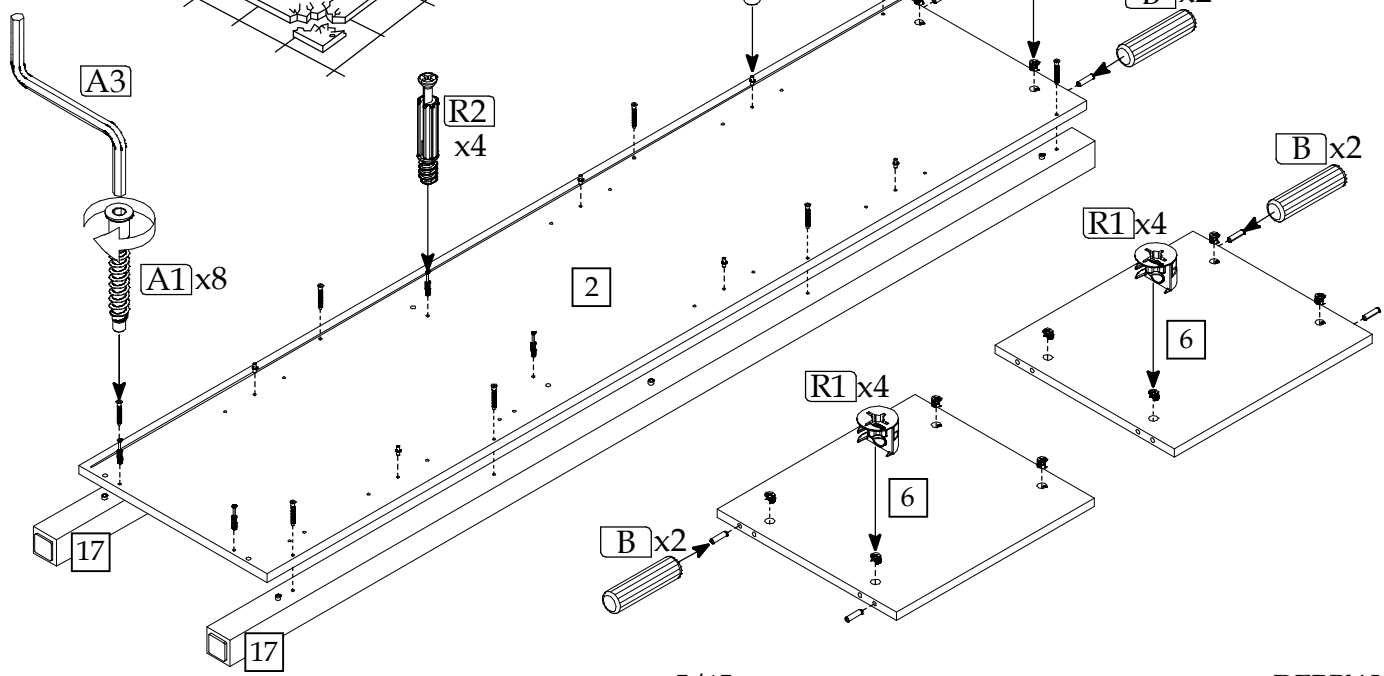
R1
x2
L1
x6
B x2
A3
R2
x4
A1 x8
2
B x2
R1 x4
6
R1 x4
6
B x2
17
17

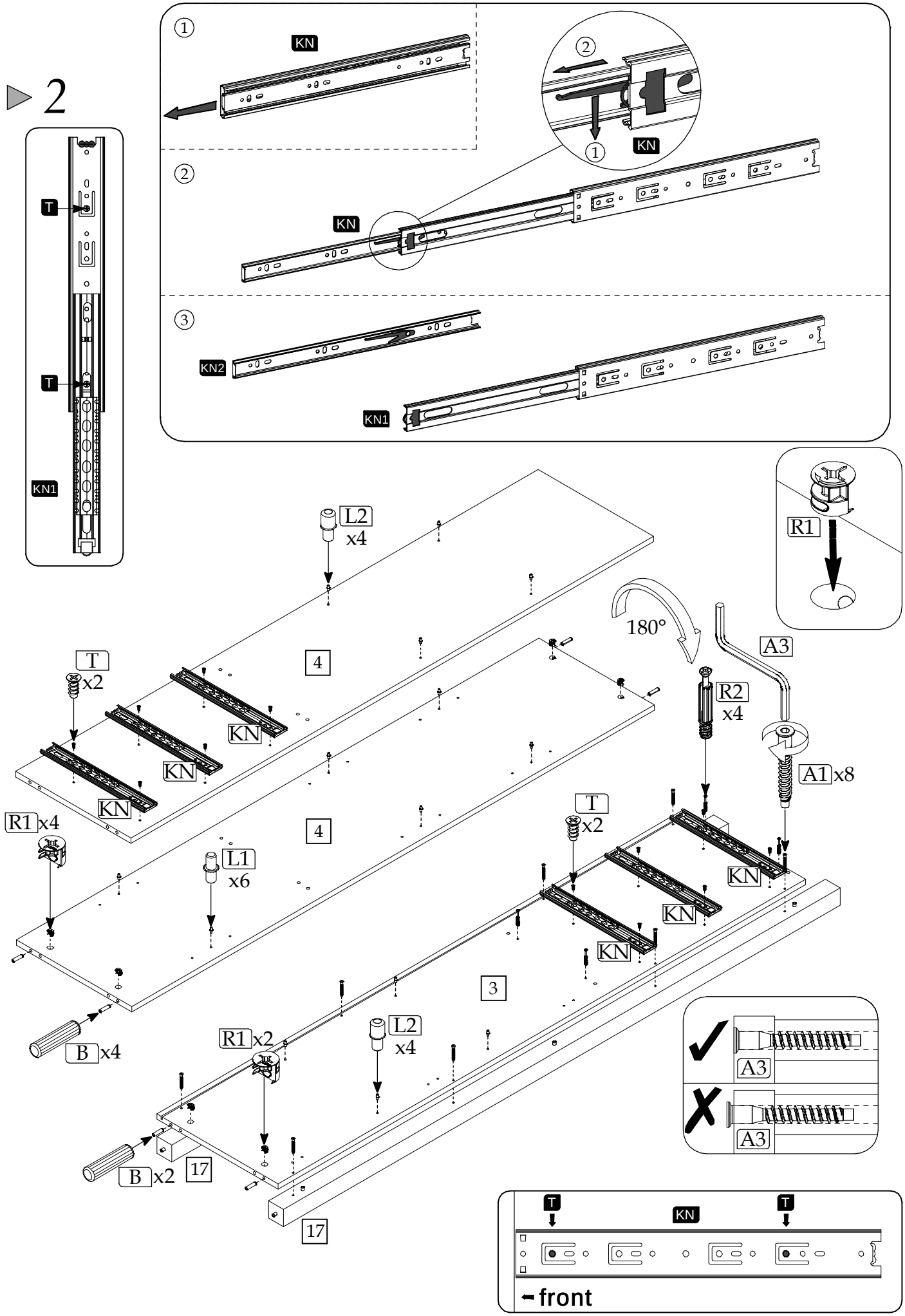
2
T
T
KN1
1
KN
2
KN
1
KN
2
KN
3
KN2
KN1
L2
x4
R1
180°
A3
T
x2
4
KN
KN
KN
R2
x4
A1 x8
R1 x4
4
L1
x6
T
x2
KN
KN
KN
3
B x4
R1 x2
L2
x4
A3
A3
B x2
17
17
T
KN
T
front

3

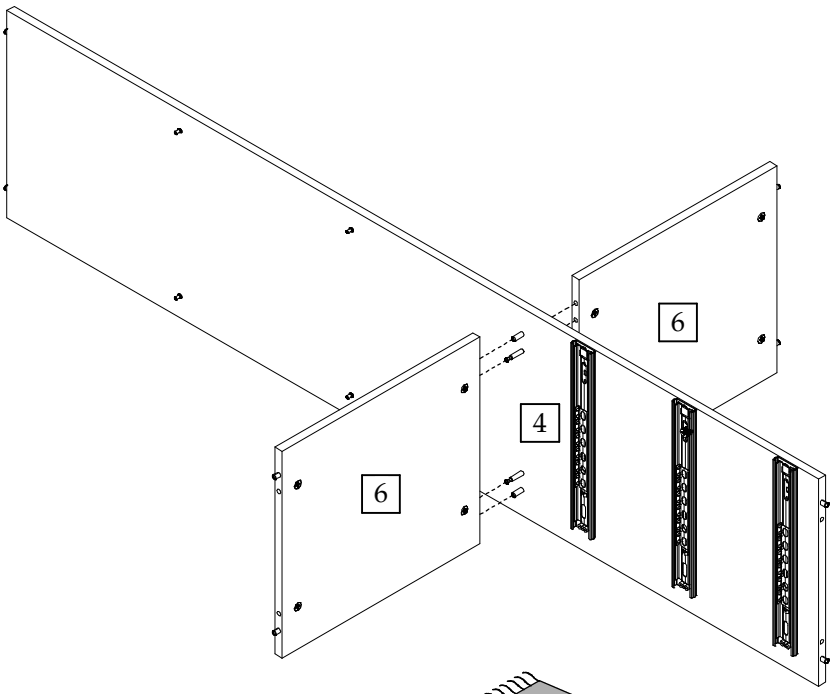

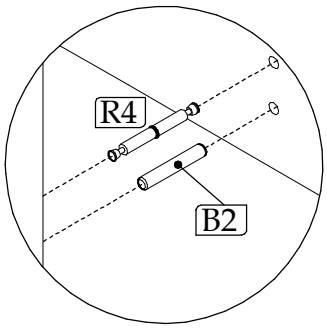

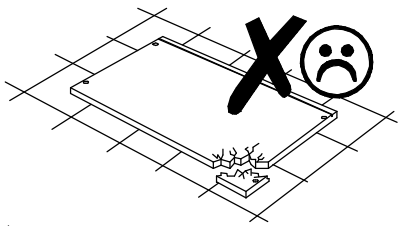

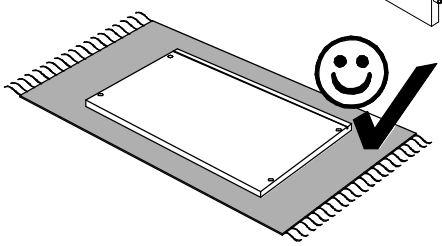

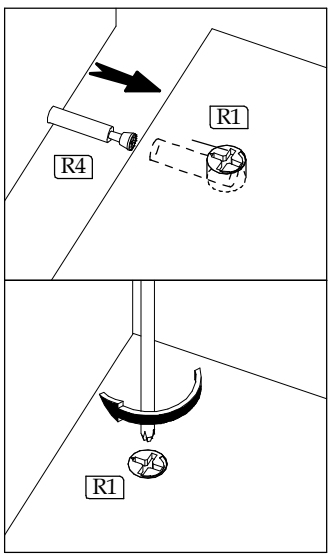

4

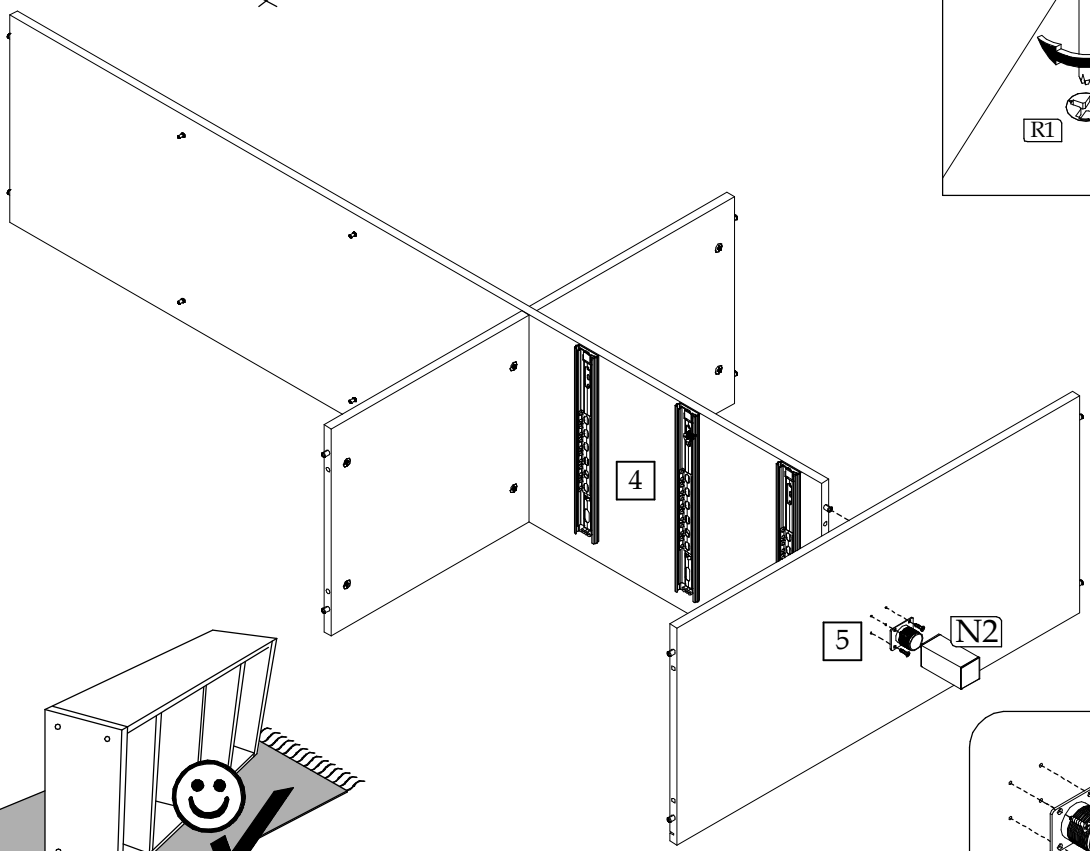

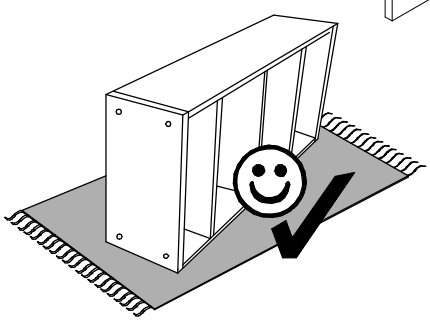

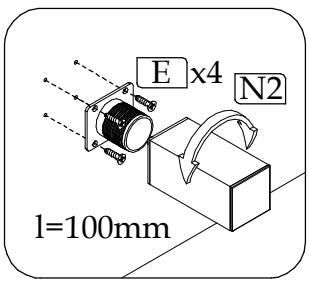

▶ 5

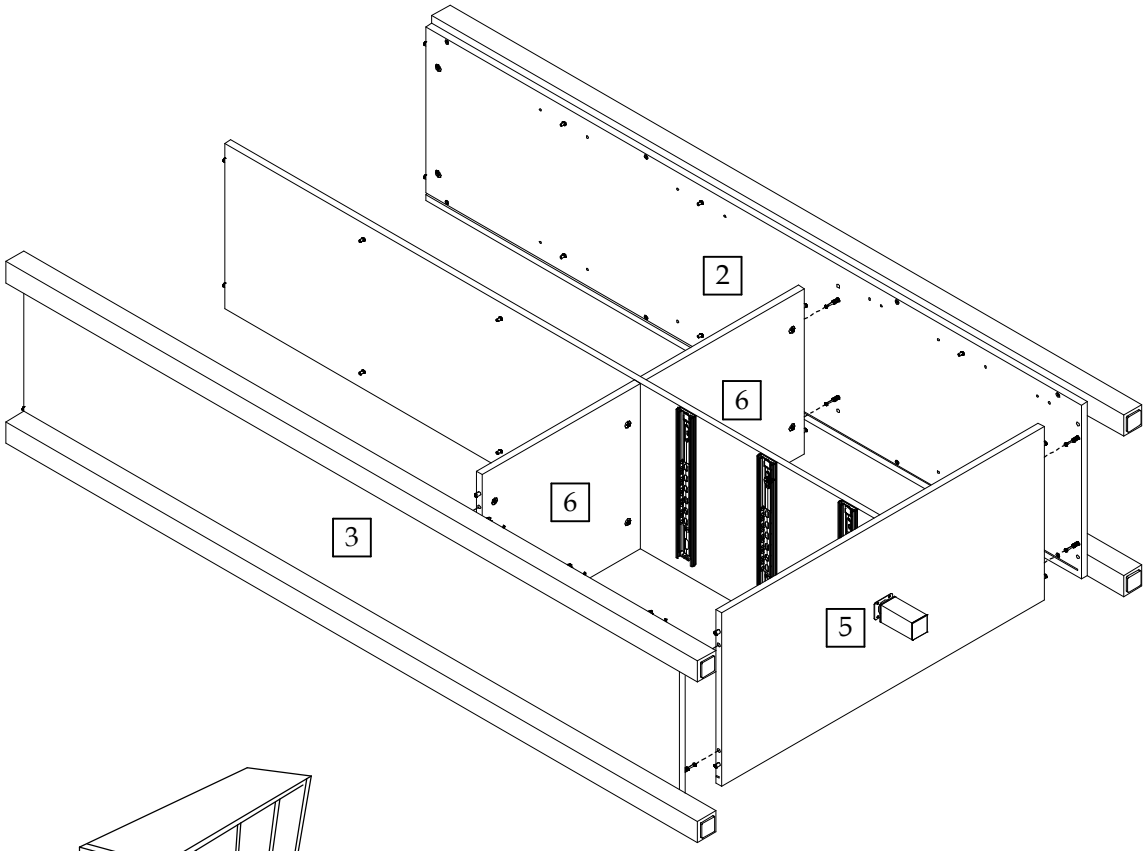

▶ 6

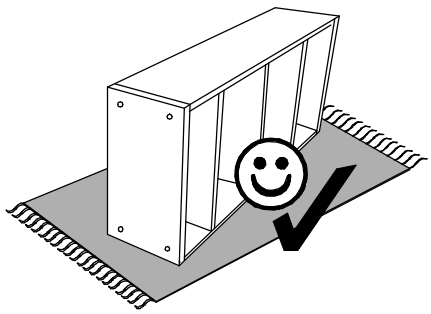

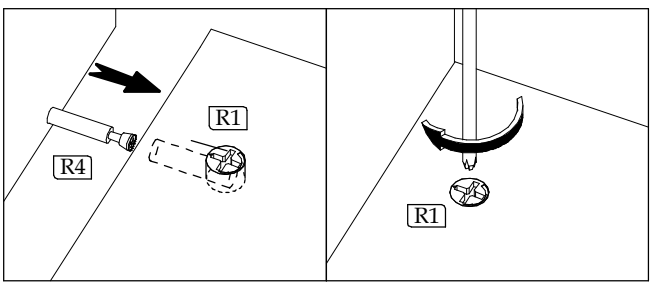

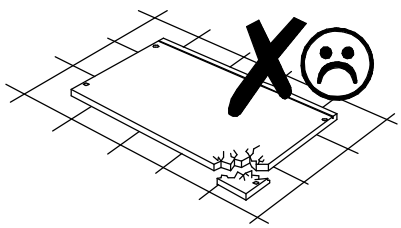

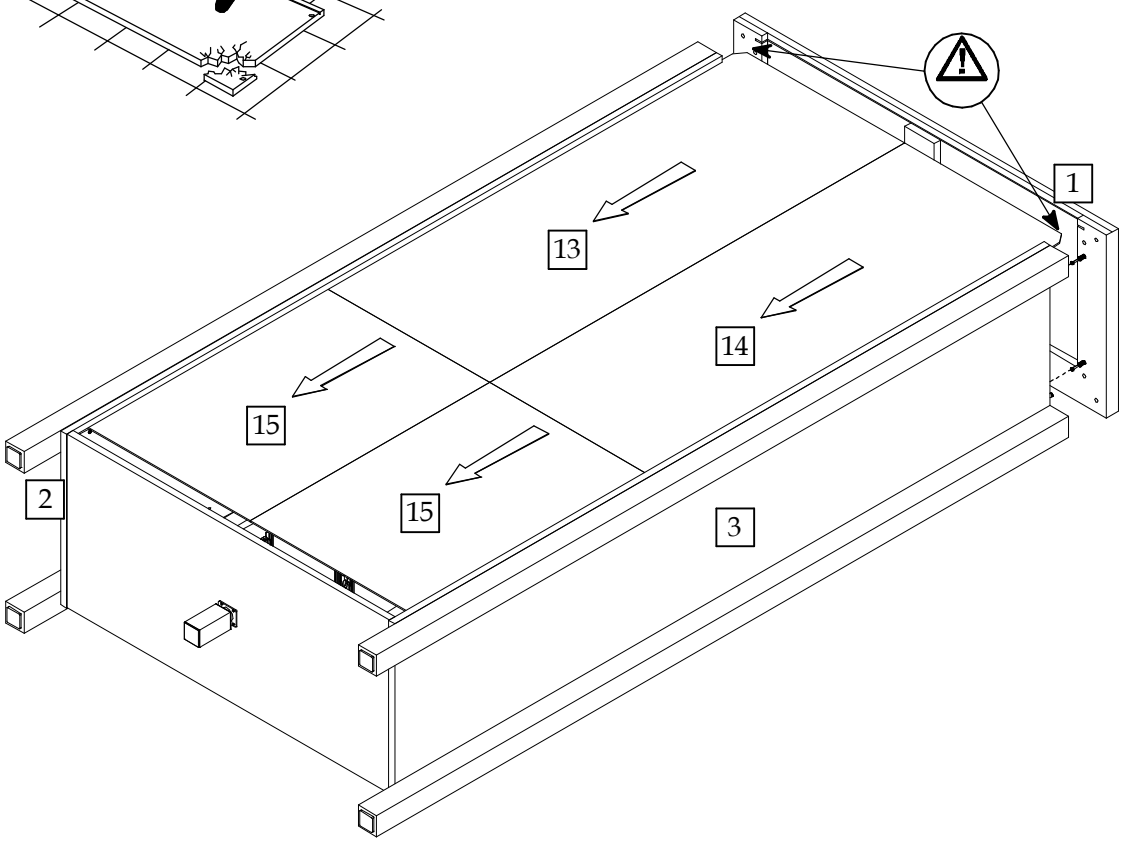

7

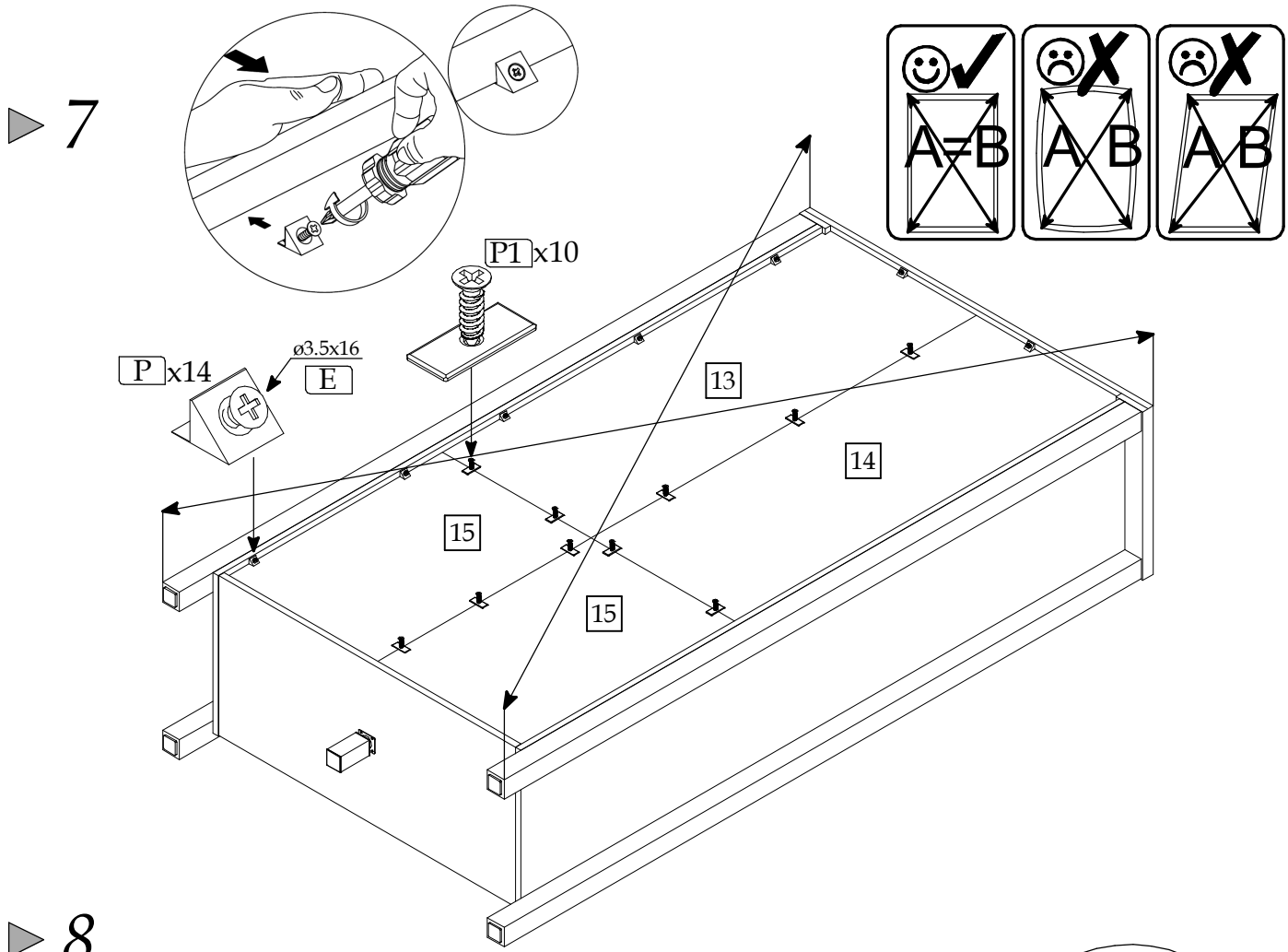
A=B
A B
A B
P1 x10
P x14
ø3.5x16
E
13
14
15
15

8

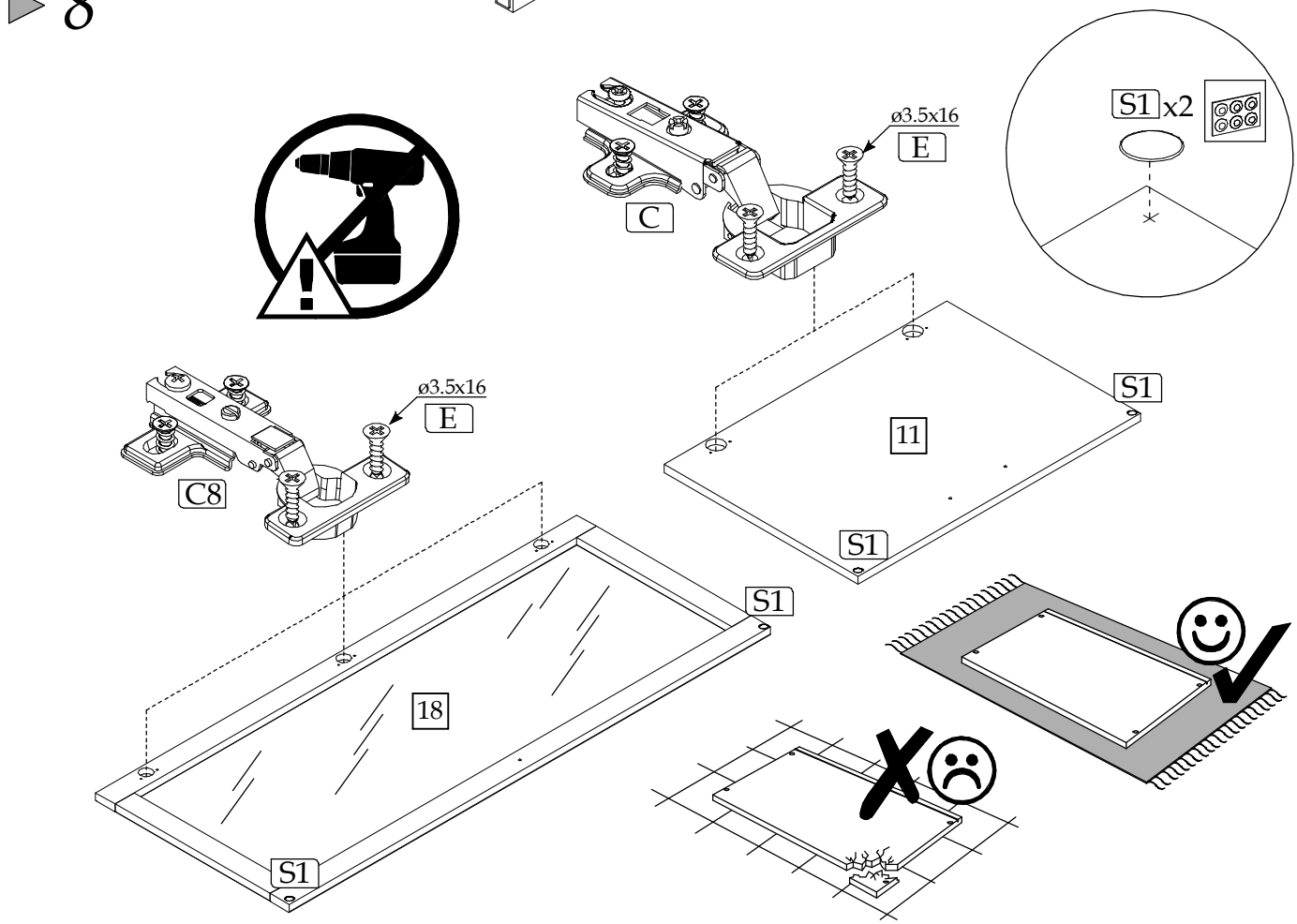
S1 x2
ø3.5x16
E
C
ø3.5x16
E
C8
11
S1
S1
18
S1
S1

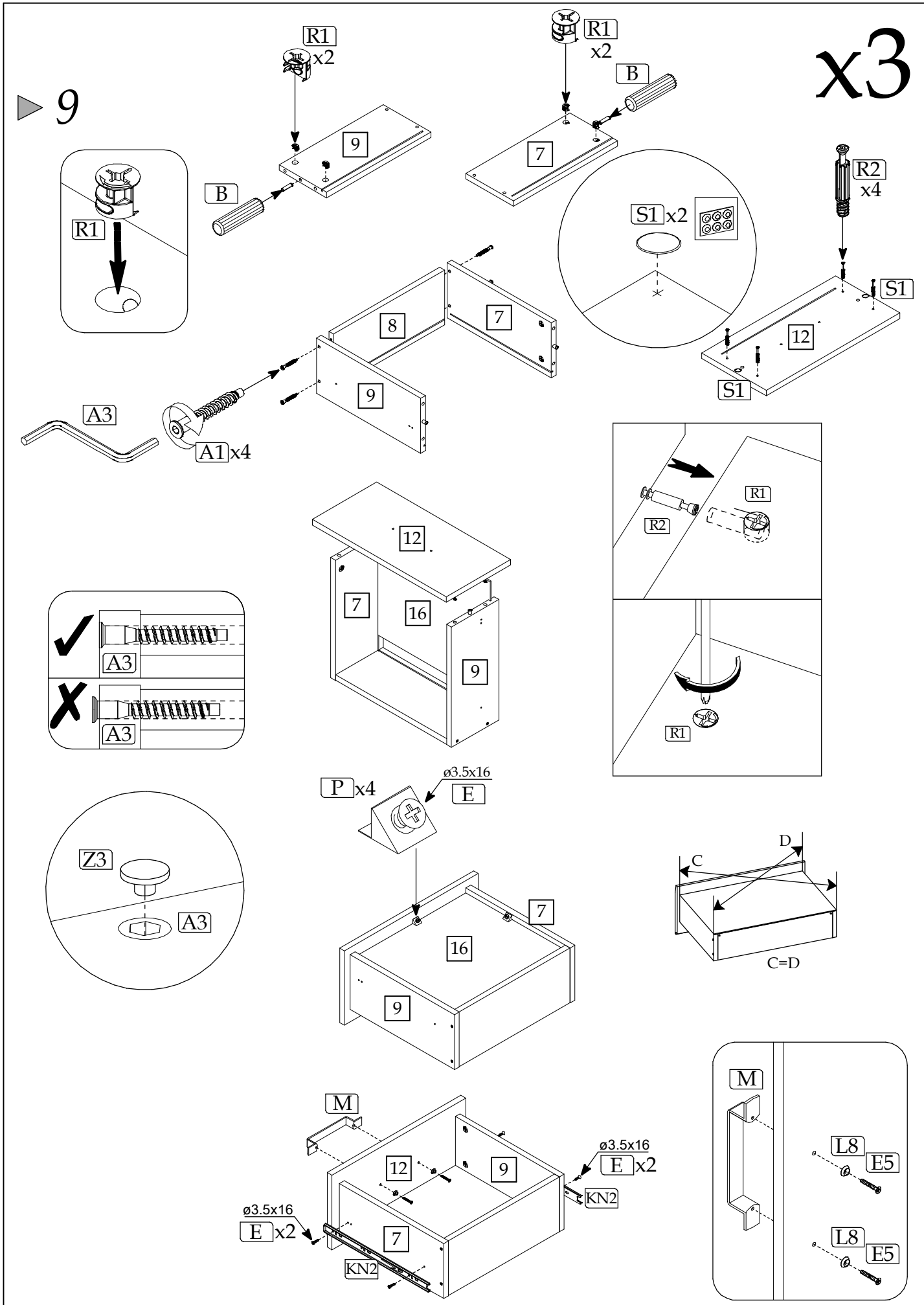
9
x3
R1
x2
B
9
R1
x2
B
7
R1
B
S1 x2
R2
x4
S1
8
7
9
12
S1
A3
A1 x4
12
7
16
9
R2
R1
R1
A3
A3
Z3
A3
P x4
ø3.5x16
E
7
16
9
D
C
C=D
M
12
9
ø3.5x16
E x2
KN2
ø3.5x16
E x2
7
KN2
M
L8
E5
L8
E5

▶ 10

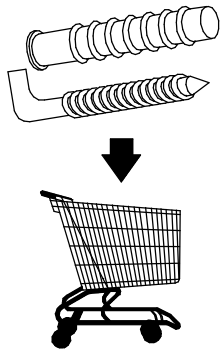

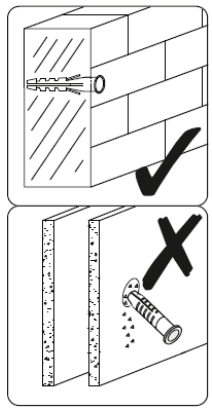

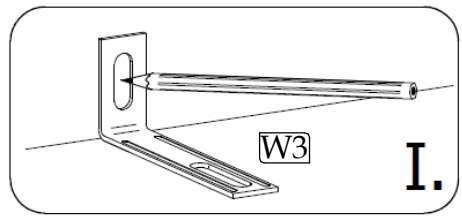

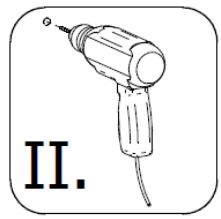

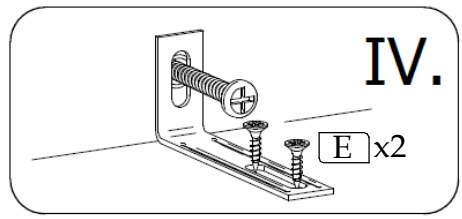

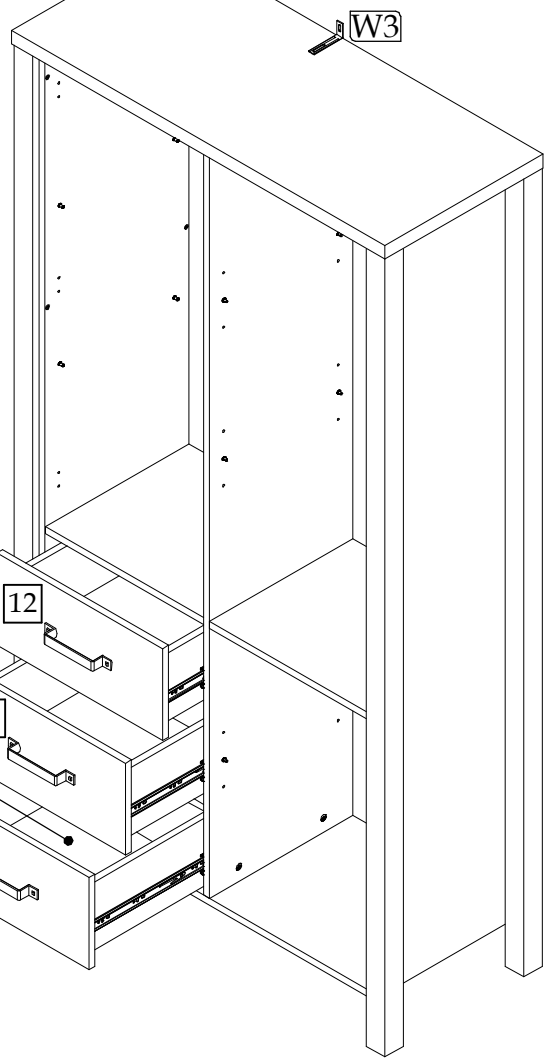

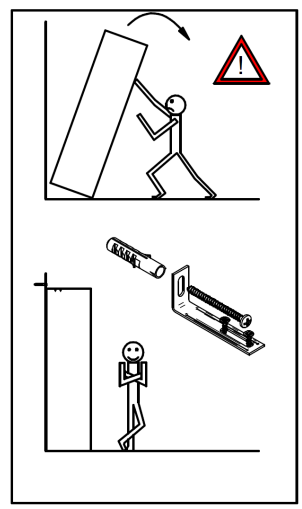

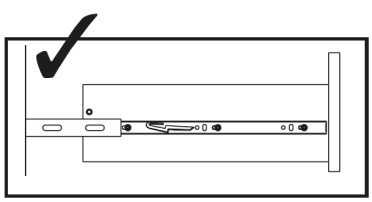

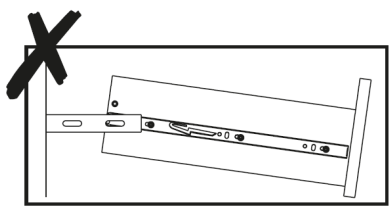

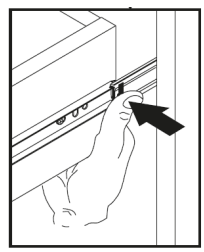

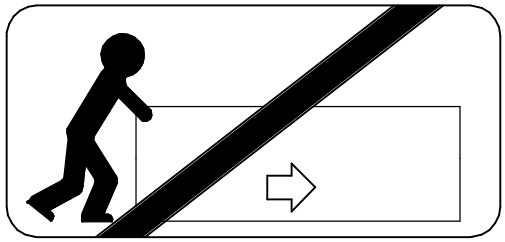

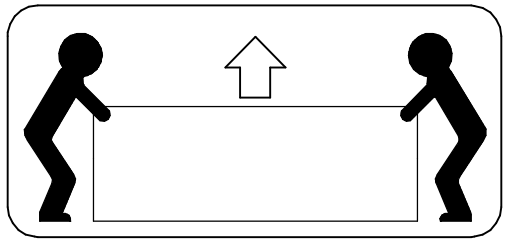

▶ 11

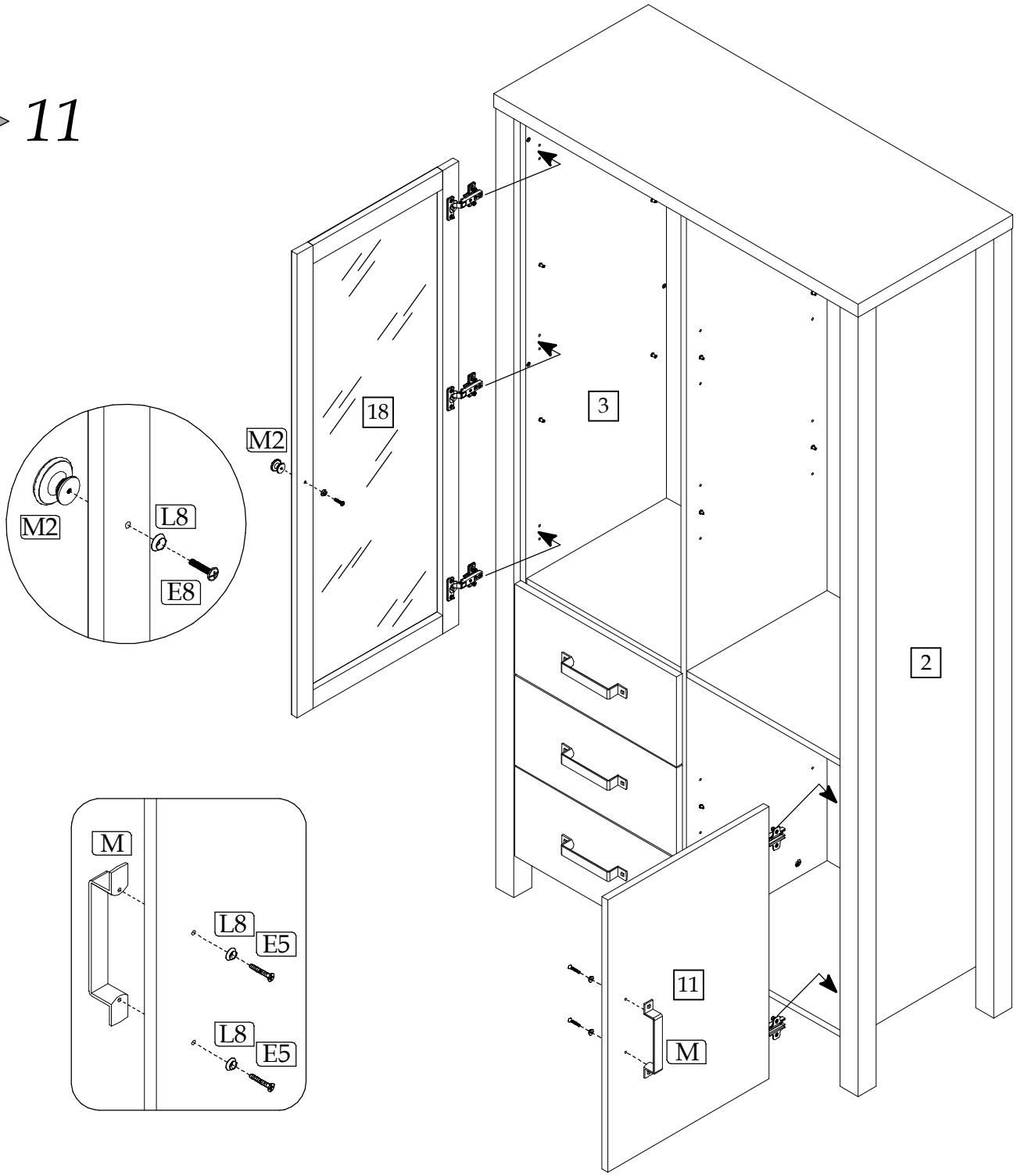
M2
L8
E8
18
M2
3
2
M
L8
E5
L8
E5
11
M

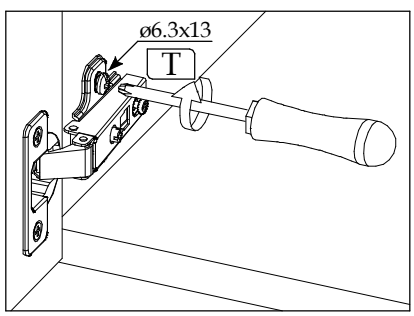
ø6.3x13
T

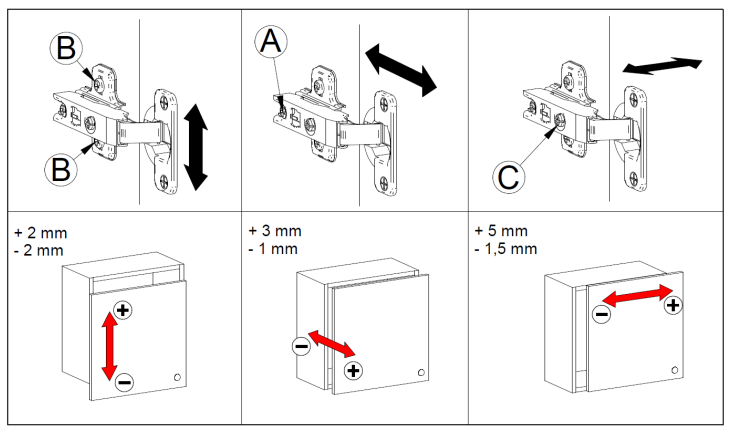
B
B
A
C
+ 2 mm
- 2 mm
+ 3 mm
- 1 mm
+ 5 mm
- 1,5 mm

▶ 12

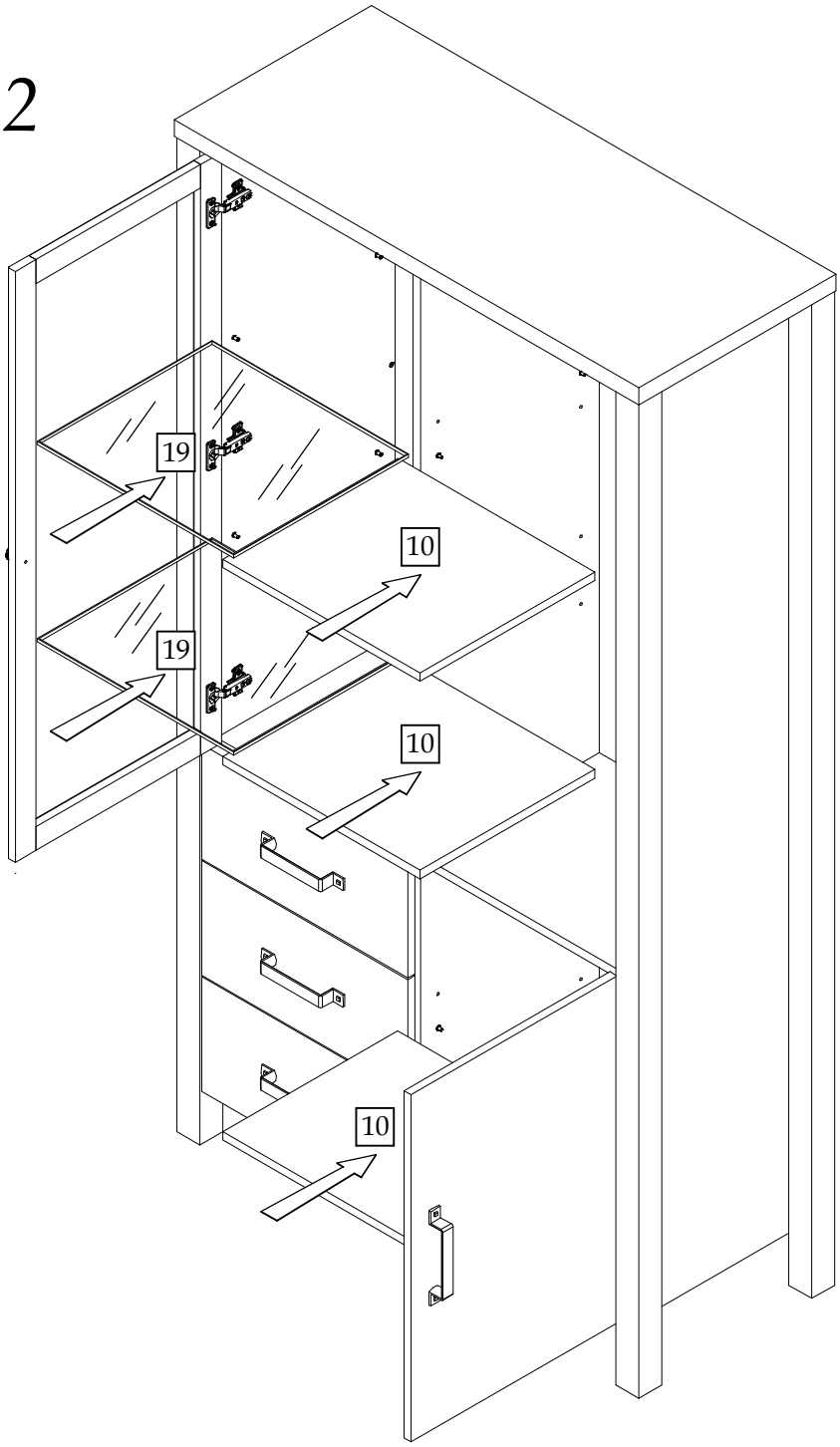

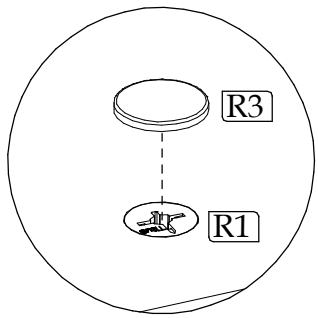

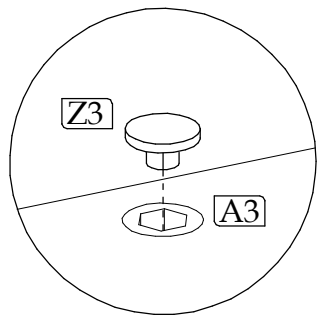

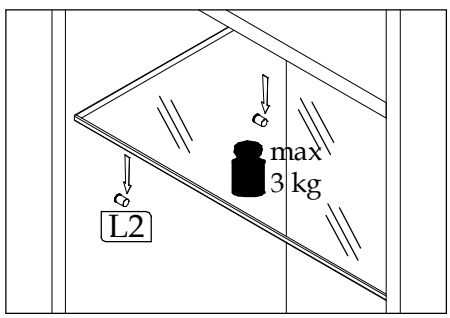

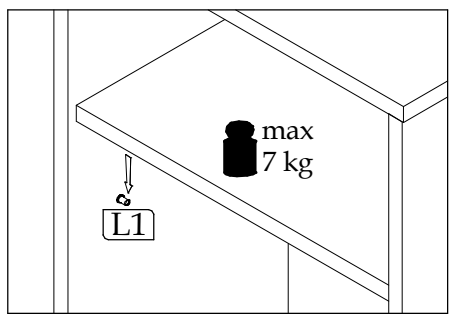

▶ 13

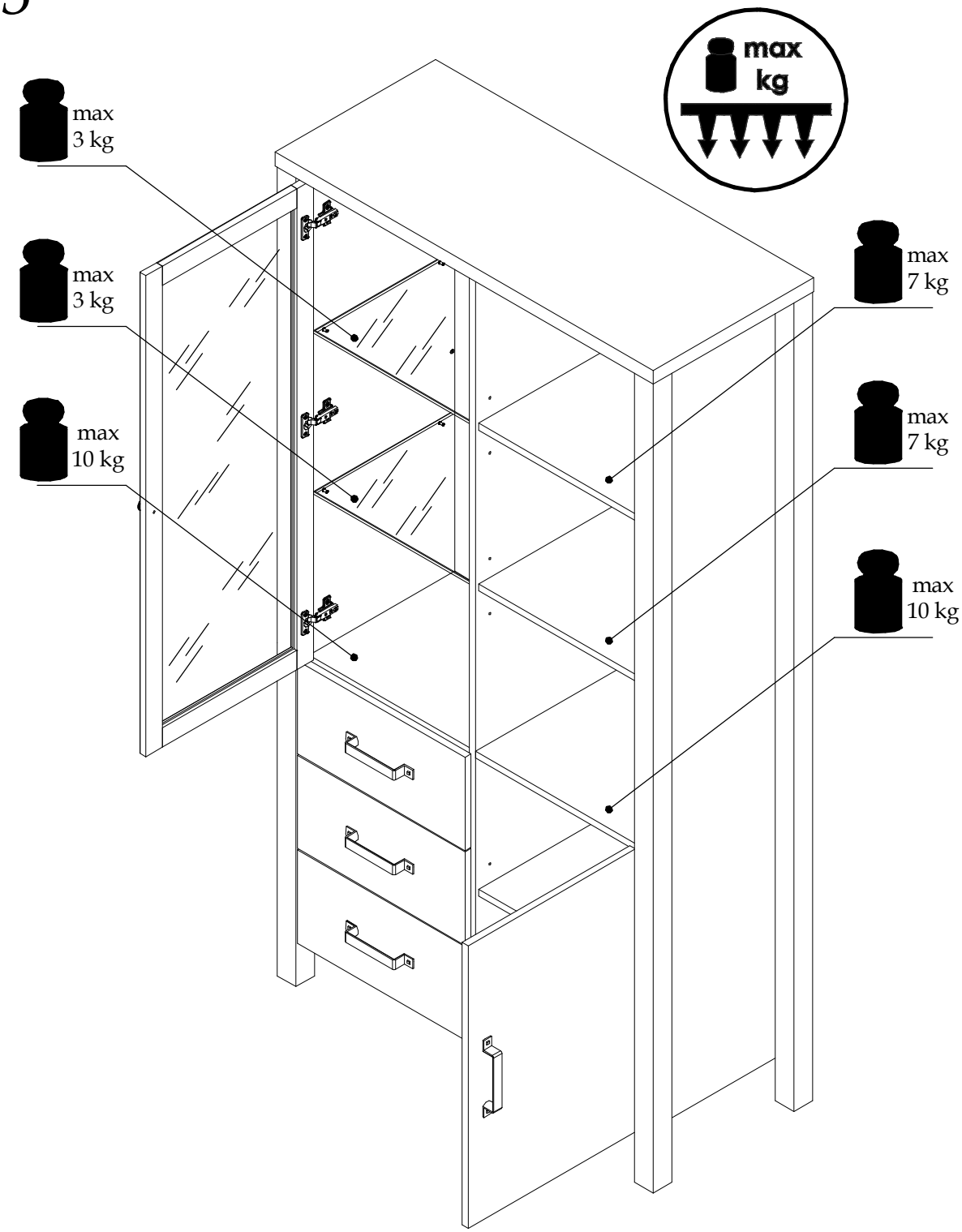

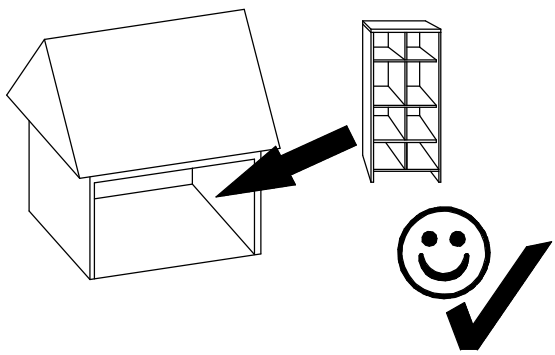

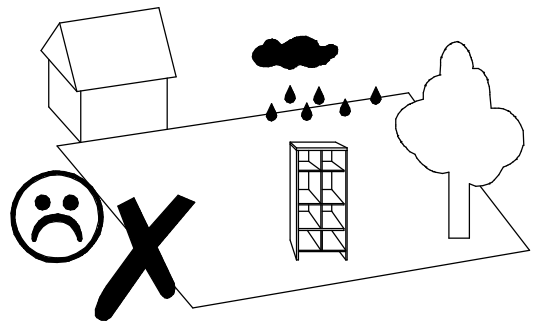

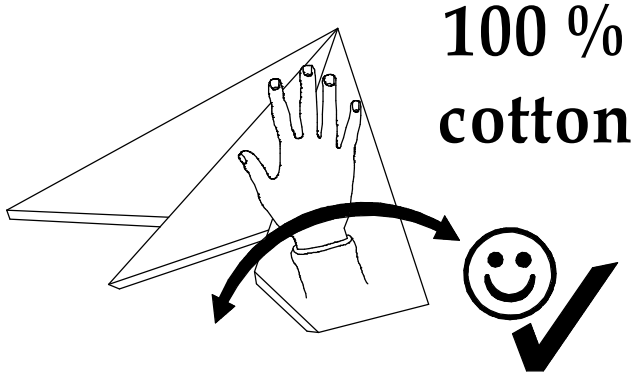
100 %
cotton

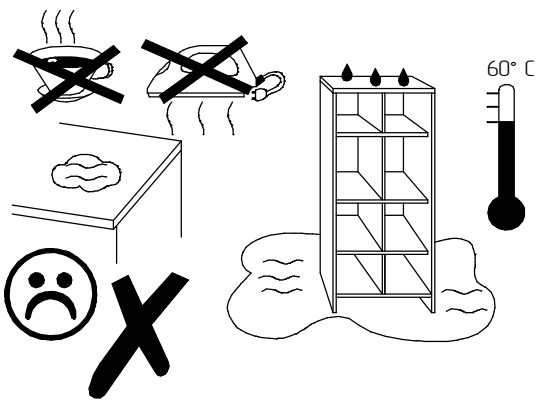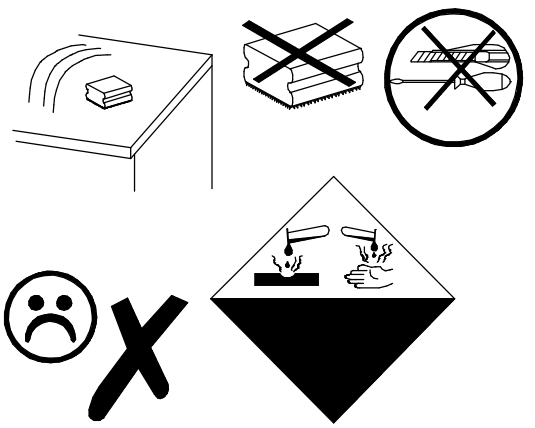
60° C