BATIK VD1468-25
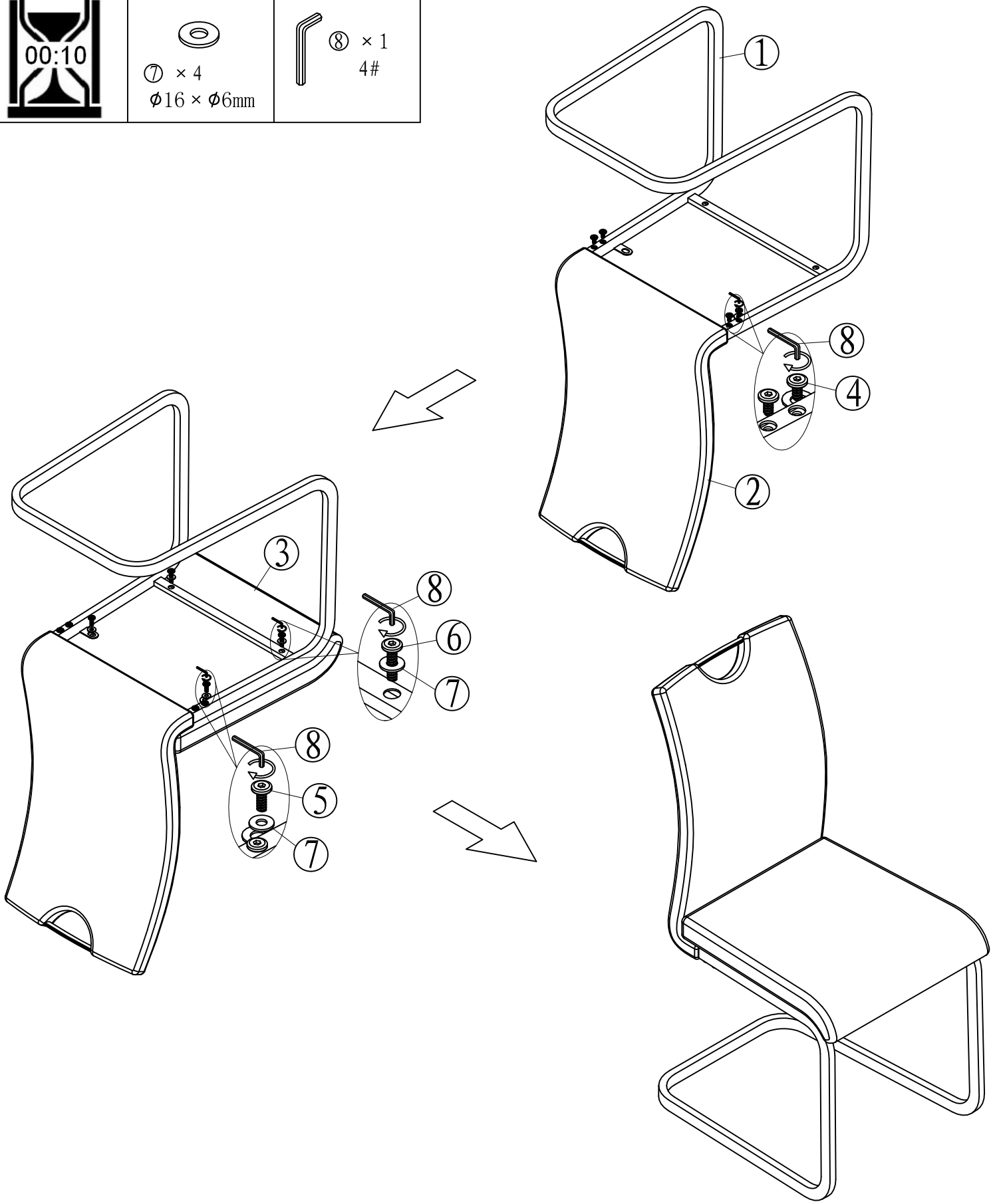
	① × 1	② × 1	③ × 1	④ × 4 M6 × 12mm	⑤ × 2 M6 × 16mm	⑥ × 2 M6 × 25mm
00:10	⑦ × 4 ϕ16 × ϕ6mm	⑧ × 1 4#